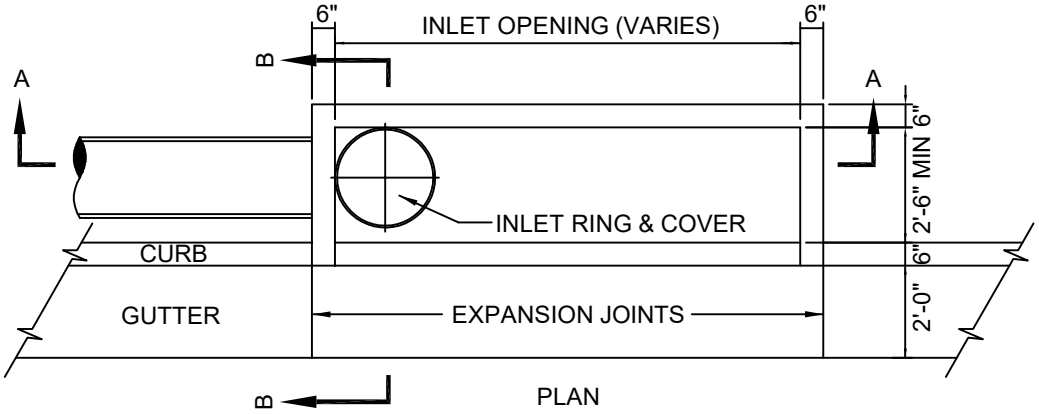

PLAN

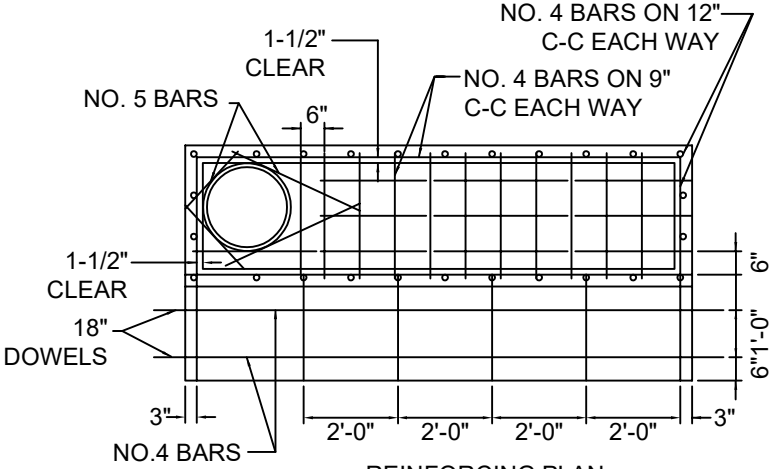

REINFORCING PLAN
TOP & THROAT

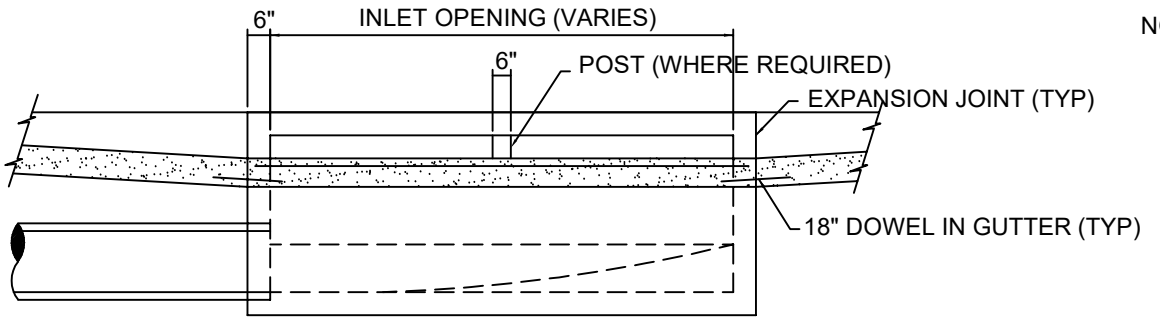

PROFILE

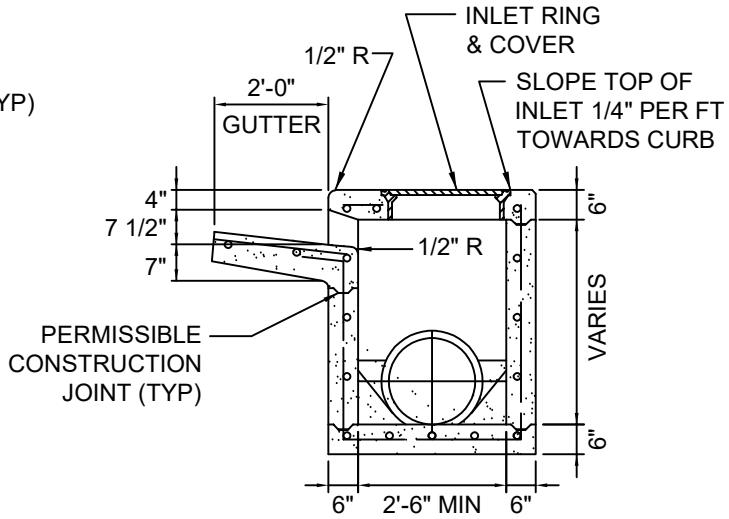

SECTION "B-B"

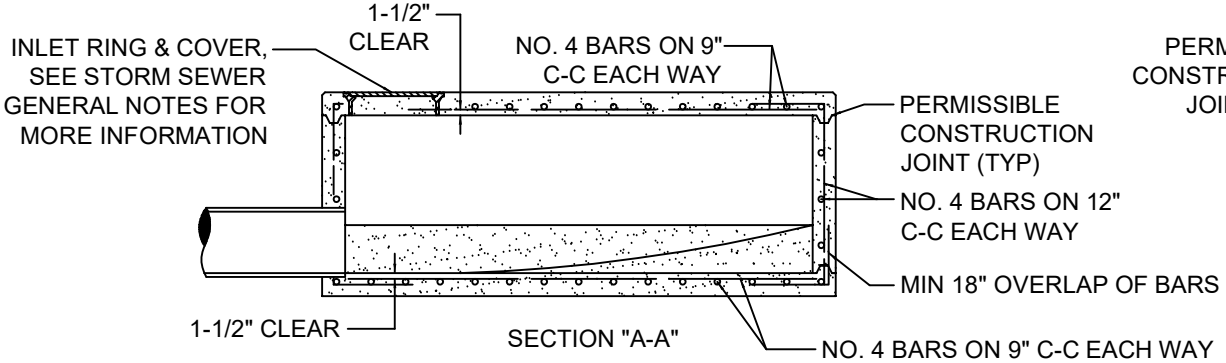

SECTION "A-A"

CITY OF TYLER STANDARD DETAIL	**STORM SEWER** **STANDARD CURB INLET**	REVISION DATE: MAY 14, 2021